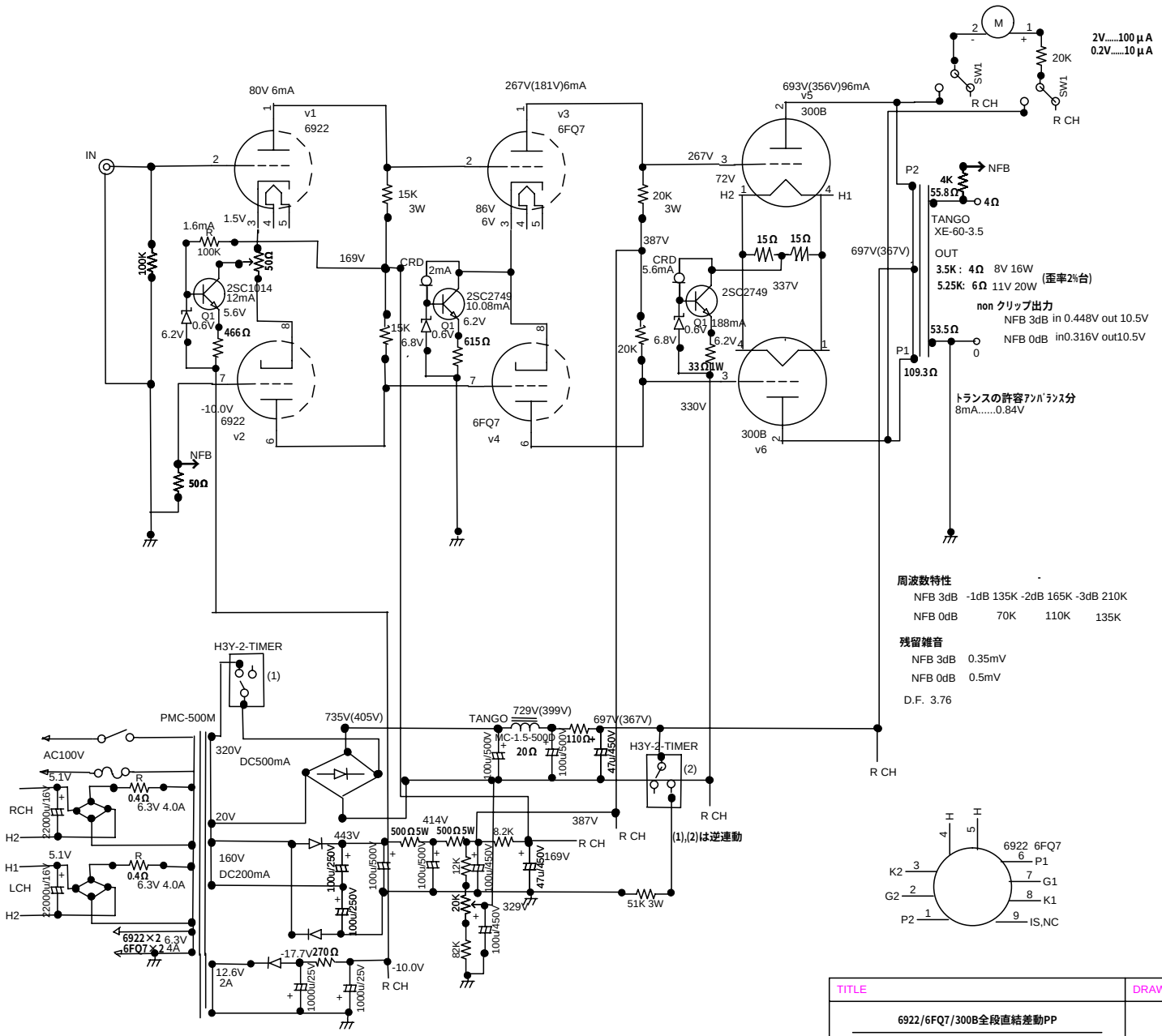

TITLE	DRAWING_No.
6922/6FQ7/300B全段直結差動PP	

SHEET	DATE	DESIGN
—	2004.6.6	Shusaku Hamada

shusaku